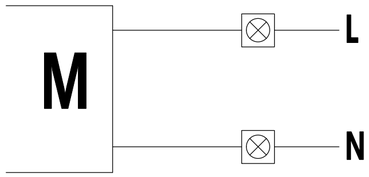

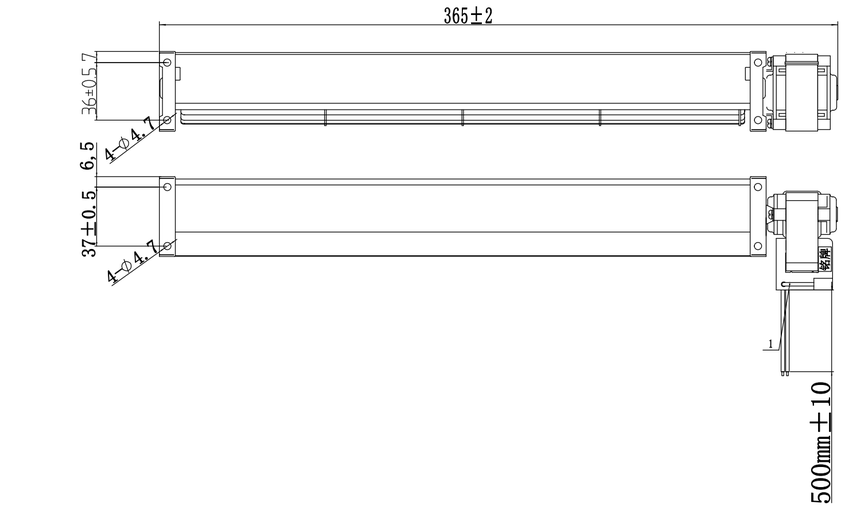

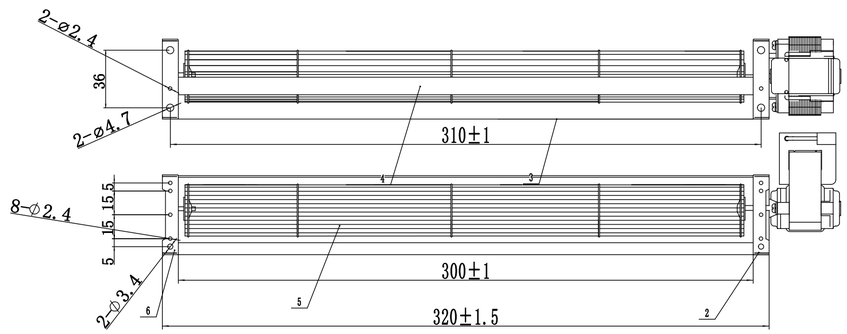

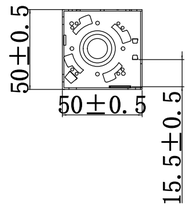

Technical Request

1. The appearance and surface of the product should be clean, without rust spots, mildew, scratches, No obvious burr and other surface defects.
2. Shell riveted firmly, no obvious gap, size in line with the drawing requirements.
3. Make the impeller ø30, diagonal flow, 5 medium disks, 20 blades, steel shaft ø3, bushing ø 1.5
4. Safety performance in accordance with GB/T13933-2008 regulations.
5. Unnoted tolerance is GB/T1804-v.
6. Add a 95℃ temperature protector

No.	Item	Material	Qty
1	Motor	4815	1
2	Right Side Plate	Iron	1
3	Air Outlet Plate	Iron	1
4	Air Inlet Plate	Iron	1
5	Impeller	Al	1
6	Left Side Plate	Iron	1

SPECIFICATION

VOLTAGE (V)	230
FREQUENCY (Hz)	50
SPEED (r/min)	2400
AIR VOLUME (m^3/h)	71
BEARINGS	Ball bearing
INPUT POWER (W)	/

Mark	Qty	Sign	Name	Date

Stage Mark			
S			
Version	A1	Name	Date
Design		zhang	20260821
Audit			
Technical			
Standard			
Approve			

Material | Ratio 1:1 | Weight

Ningbo Longwell Electric Technology Co., Limited

LWCA-30290SN-07-16

第 1 页 共 1 页