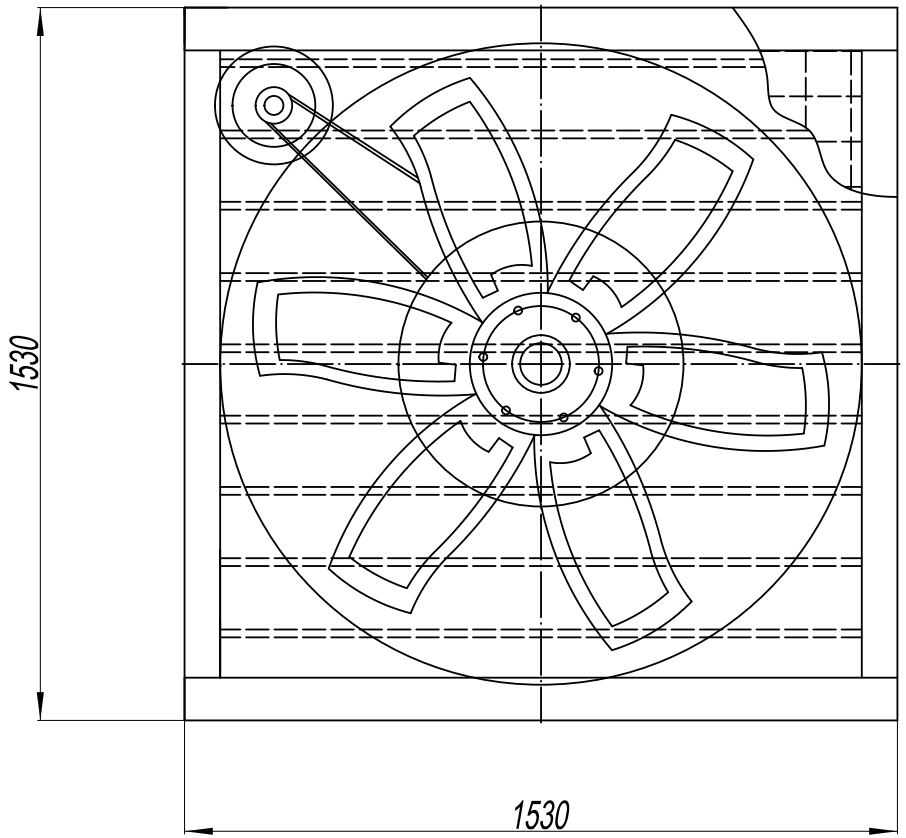

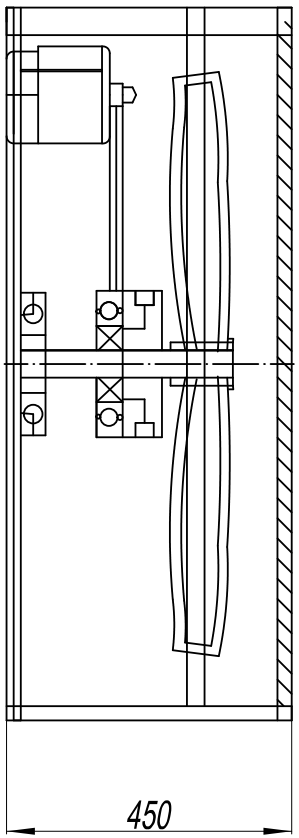

SPECIFICATION	
VOLTAGE (V)	3~380
FREQUENCY (Hz)	50
SPEED (r/min)	1400
AIR FLOW (m^3/h)	51000
DIAMETER OF BLADES (mm)	1400
BLADES SPEED (RPM)	420
TOTAL PRESSURE (Pa)	56
INPUT POWER (W)	1500
NOISE (dBA)	≤75

Mark	Qty	Sign	Name	Date

Stage Mark			
S			
Version	A1	Name	Date
Design		Zhong	20260303
Audit			
Technical			
Standard			
Approve			

Material		Ratio	1:1	Weight	
Ningbo Longwell Electric Technology Co., Limited					
LWPVE-1530T-01					
1	1				