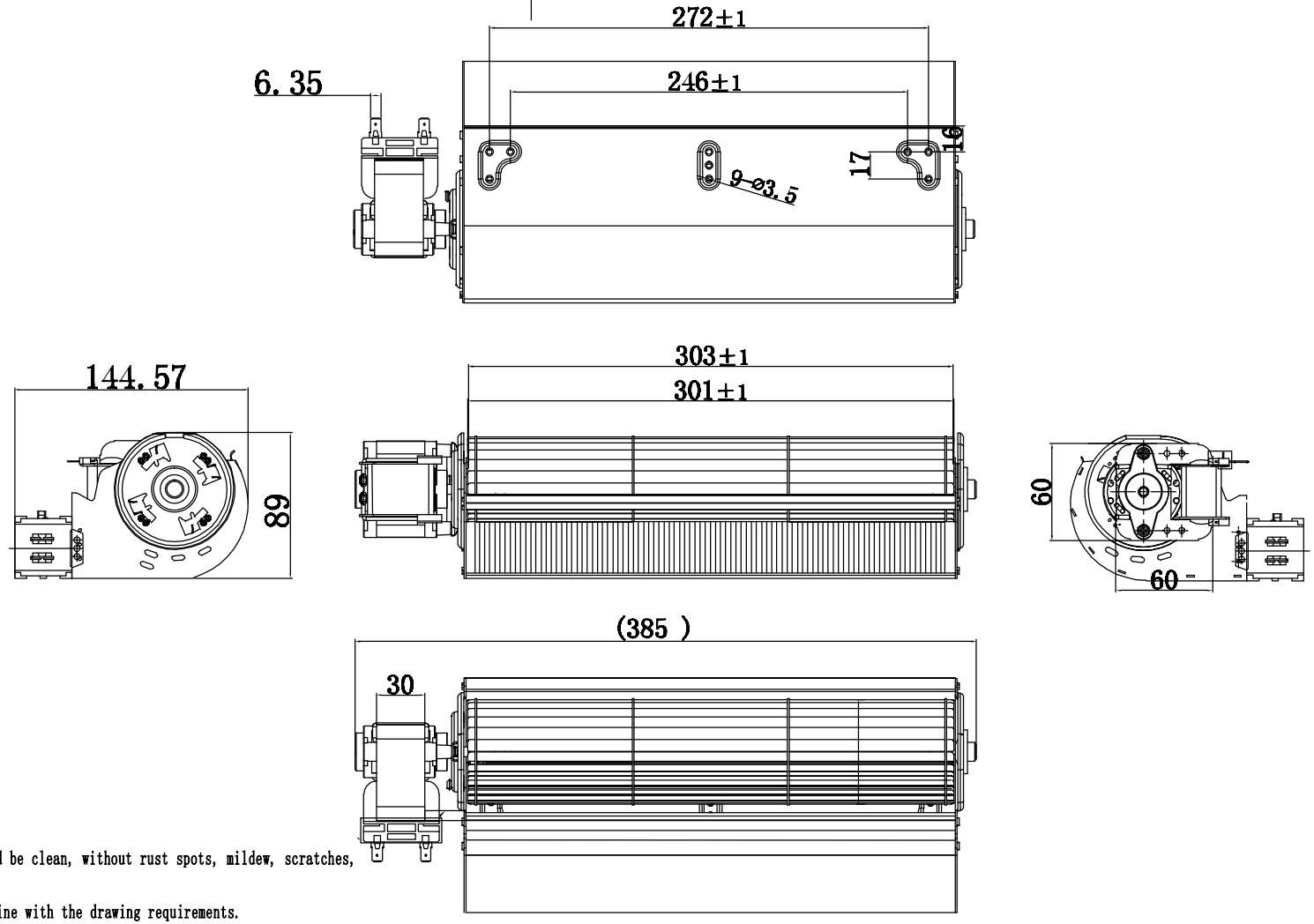

Technical Request

1. The appearance and surface of the product should be clean, without rust spots, mildew, scratches, No obvious burr and other surface defects.
2. Shell riveted firmly, no obvious gap, size in line with the drawing requirements.
3. Make the impeller ø65, 30 blades, steel shaft ø3, bushing ø 1.5
4. Safety performance in accordance with GB/T13933-2008 regulations.
5. Unnoted tolerance is GB/T1804-v.

SPECIFICATION

VOLTAGE (V)	220
FREQUENCY (Hz)	50
SPEED (r/min)	1800
Current (A)	0.35
BEARINGS	Ball bearing
Input Power (W)	40

Mark	Qty	Sign	Name	Date

Stage Mark			
S			
Version	A1	Name	Date
Design		GUO	20260530
Audit			
Technical			
Standard			
Approve			

Material		Ratio	1:1	Weight

Ningbo Longwell Electric Technology Co., Limited

LWCA-65300SN-10-43

第 1 页 共 1 页