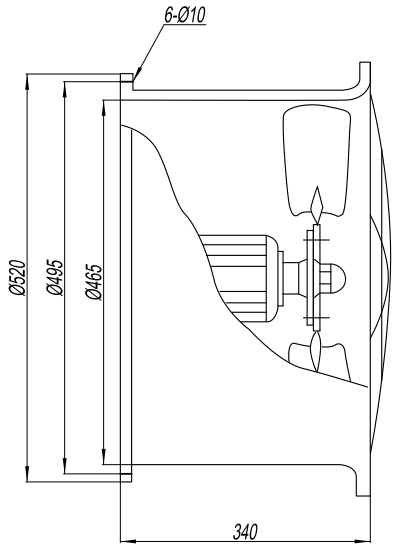

SPECIFICATION	
VOLTAGE (V)	AC 380
FREQUENCY (Hz)	50
SPEED(RPM)	1450
AIR FLOW (m^3/h)	10400
STATIC PRESSURE (Pa)	217
POWER (W)	550

					Stage Mark			Material		Ratio	1:1	Weight	
					S								
					Version	A1	Name	Date	Ningbo Longwell Electric Technology Co., Limited				
					Design		Zhong	20260209	LWT35-4.5-002				
					Audit								
					Technical								
					Standard								
Mark	Qty	Sign	Name	Date	Approve				1	1			