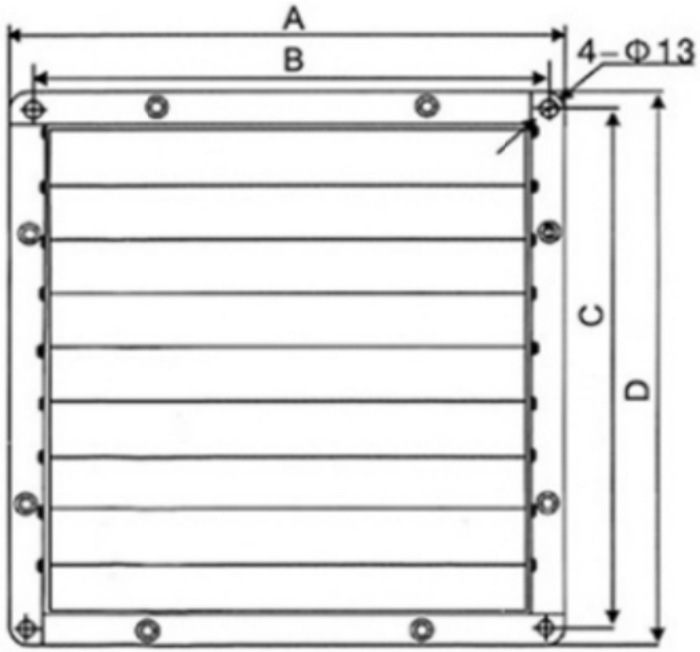

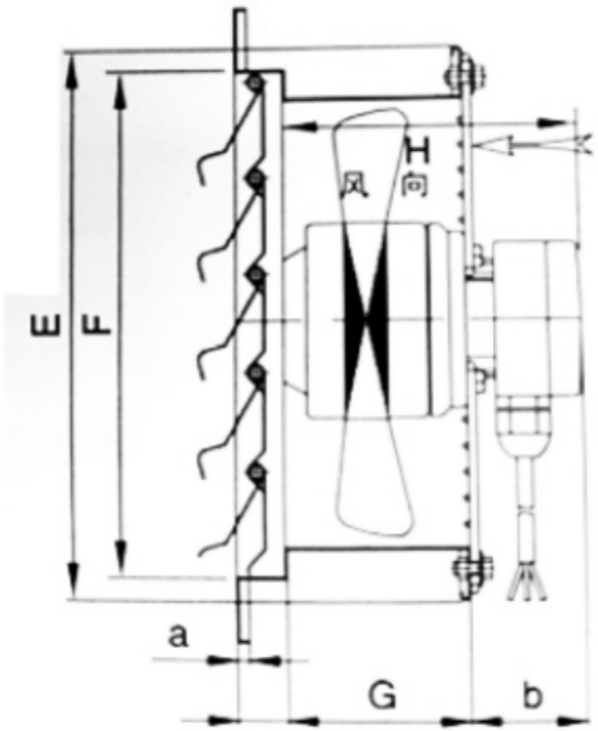

A	670mm
B	640mm
C	640mm
D	670mm
E	625mm
F	615mm
G	209mm
H	218mm
a	12mm
b	57mm

SPECIFICATION	
VOLTAGE (VAC)	220
Air flow (m³/h)	13000
Speed (RPM)	1380
Frequency (Hz)	50
Power (W)	750
Air Pressure (Pa)	230
Current (A)	3.25
Capacitor (μF)	15
Noise level [dB(A)]	75

					Stage Mark		
					S		
					A1		
					Design	GUO	20260529
					Audit		
					Technical		
					Standard		
Mark	Qty	Sign	Name	Date	Approve		

Material		Ratio	1:2.5	Weight	
Ningbo Longwell Electric Technology Co., Limited					
LWEA4E600SM-110					
第 1 页	共 1 页				