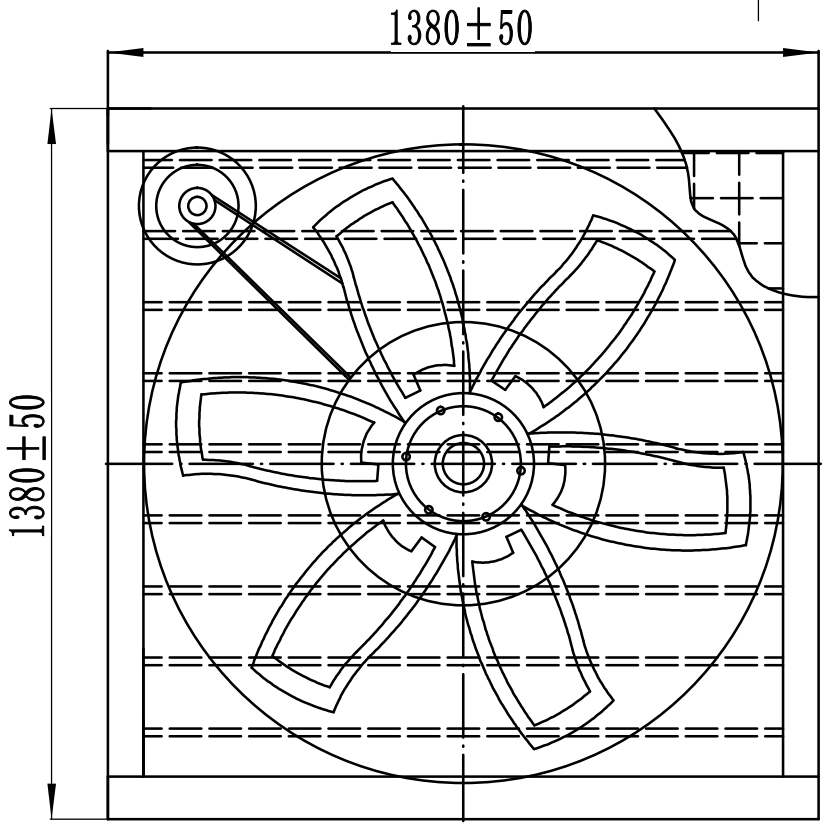

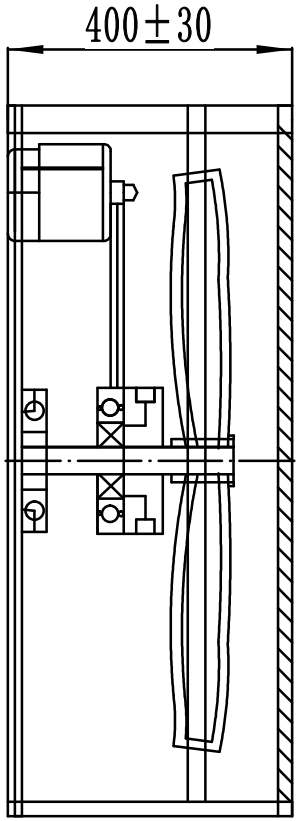

SPECIFICATION	
VOLTAGE (V)	380
MOTOR SPEED (r/min)	1400
AIR VOLUME (m^3/h)	43500
DIAMETER OF BLADES(MM)	1270
BLADES SPADES(RPM)	440
Total pressure(Pa)	56
INPUTPOWER(W)	1100
NOISE[dB(A)]	≤70

Mark	Qty	Sign	Name	Date

Stage Mark			
S			
Version	A1	Name	Date
Design		GUO	20260529
Audit			
Technical			
Standard			
Approve			

Material		Ratio	1:1	Weight	

Ningbo Longwell Electric Technology Co., Limited

LWPVE-1380T -01

第 1 页 共 1 页