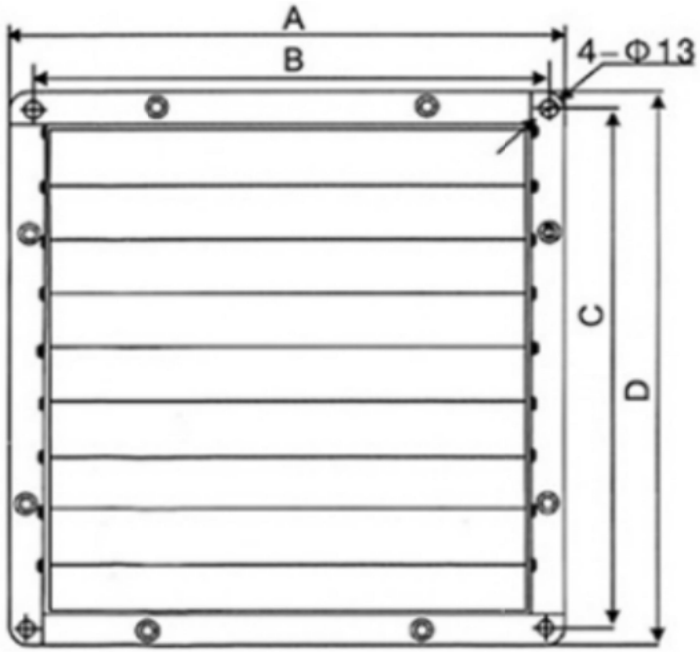

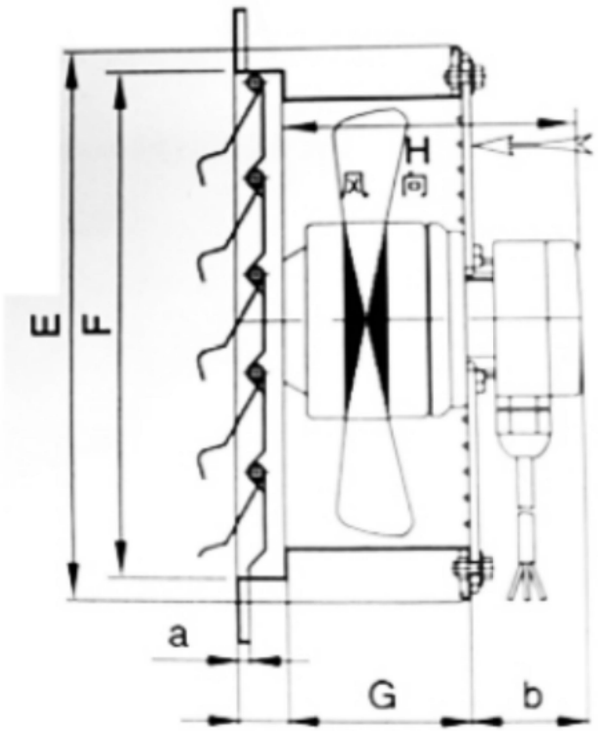

A	570mm
B	540mm
C	540mm
D	570mm
E	525mm
F	515mm
G	175mm
H	183mm
a	12mm
b	57mm

SPECIFICATION	
VOLTAGE (VAC)	220
Air flow (m³/h)	8850
Speed (RPM)	1390
Frequency (Hz)	50
Power (W)	370
Air Pressure (Pa)	190
Current (A)	1.75
Capacitor (μF)	12
Noise level [dB(A)]	72

					Stage Mark		
					S		
					A1		
					Design	GUO	20260529
					Audit		
					Technical		
					Standard		
Mark	Qty	Sign	Name	Date	Approve		

Material | Ratio 1:2.5 | Weight

Ningbo Longwell Electric Technology Co., Limited

LWEA4E500SM-102

第 1 页 共 1 页