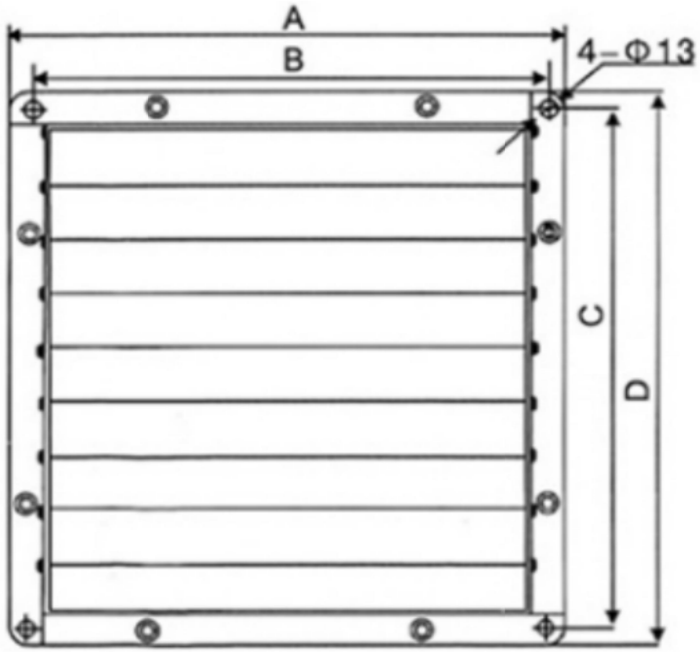

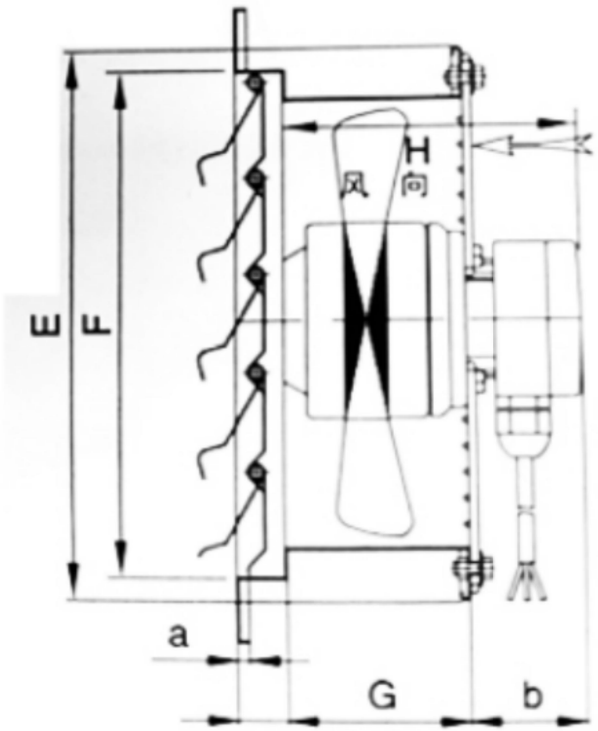

A	420mm
B	390mm
C	390mm
D	420mm
E	375mm
F	365mm
G	138mm
H	168mm
a	12mm
b	41mm

SPECIFICATION	
VOLTAGE (VAC)	220
Air flow (m³/h)	3270
Speed (RPM)	1400
Frequency (Hz)	50
Power (W)	125
Air Pressure (Pa)	93
Current (A)	0.55
Capacitor (μF)	4
Noise level [dB(A)]	64

					Stage Mark		
					S		
					A1		
					Design	GUO	20260529
					Audit		
					Technical		
					Standard		
Mark	Qty	Sign	Name	Date	Approve		

Material		Ratio	1:2.5	Weight	
Ningbo Longwell Electric Technology Co., Limited					
LWEA4E350SM-092					
第 1 页	共 1 页				