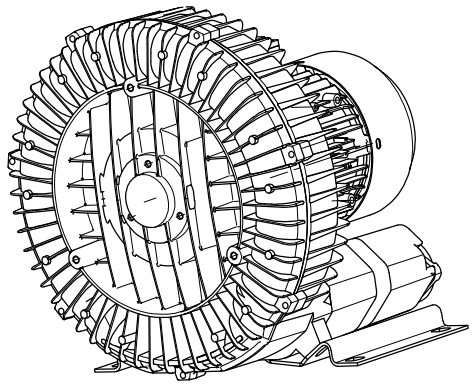

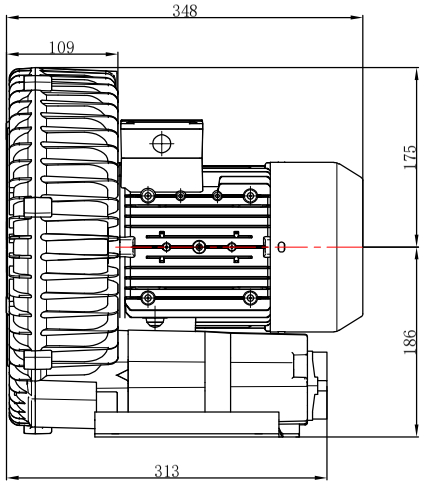

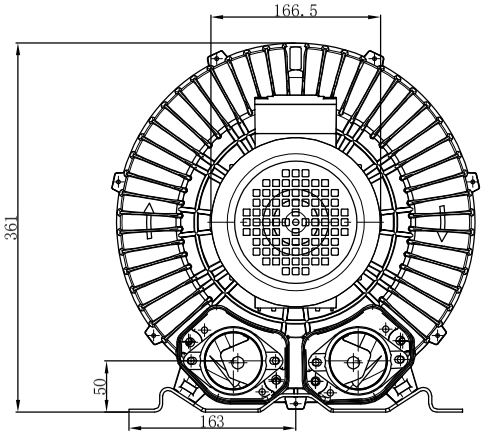

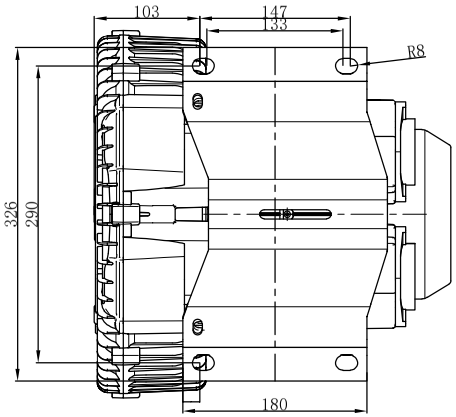

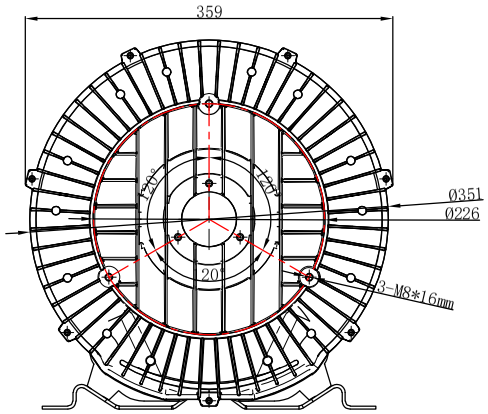

SPECIFICATION

VOLTAGE (VAC)	345-415△/380-480△
Current (A)	(9.7△/5.6Y)/(10.3△/6.0Y)
Frequency (HZ)	50/60
Max Air Flow (m^3/h)	265/315
Rated Vacuum (mbar)	-235/-245
Rated Vacuum (mbar)	220/230
Power (W)	2200/2550
Noises [db(A)]	67/70
Weight (Kg)	27

					Stage Mark			Material	1:2.5	Ratio	Weight
					S			Ningbo Longwell Electric Technology Co., Limited			
					A1						
					Design	YE	20260526	LWHPS-610S-2			
					Audit						
					Technical						
					Standard						
Mark	Qty	Sign	Name	Date	Approve			第 1 页	共 1 页		