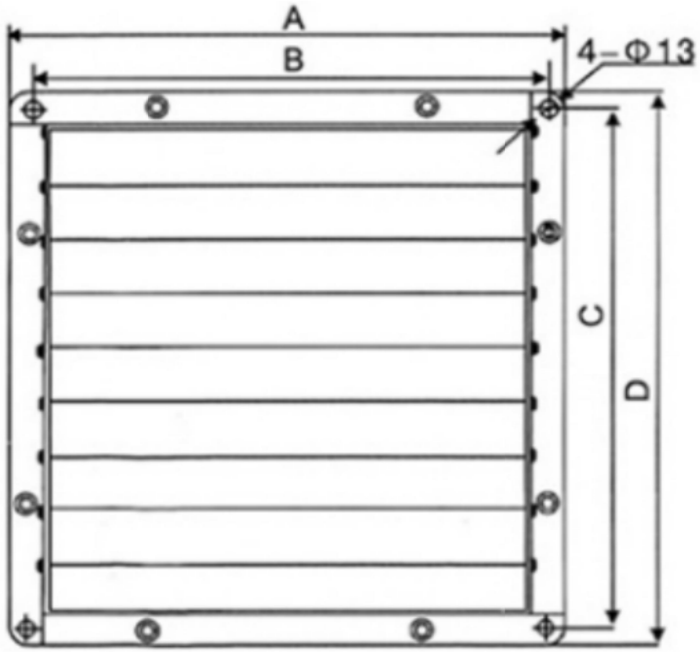

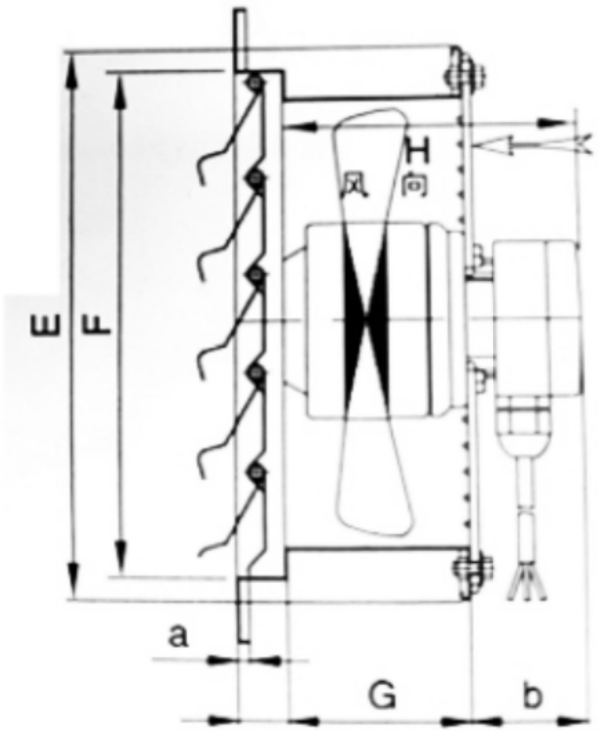

A	520mm
B	490mm
C	490mm
D	520mm
E	475mm
F	465mm
G	158mm
H	182mm
a	12mm
b	57mm

SPECIFICATION	
VOLTAGE (VAC)	220
Air flow (m³/h)	5380
Speed (RPM)	1390
Frequency (Hz)	50
Power (W)	280
Air Pressure (Pa)	150
Current (A)	1.25
Capacitor (μF)	10
Noise level [dB(A)]	69

					Stage Mark			Material		Ratio 1:2.5	Weight
					S			Ningbo Longwell Electric Technology Co., Limited			
					A1						
					Design	GUO	20260529	LWEA4E450SM-098			
					Audit						
					Technical						
					Standard						
Mark	Qty	Sign	Name	Date	Approve			第 1 页	共 1 页		