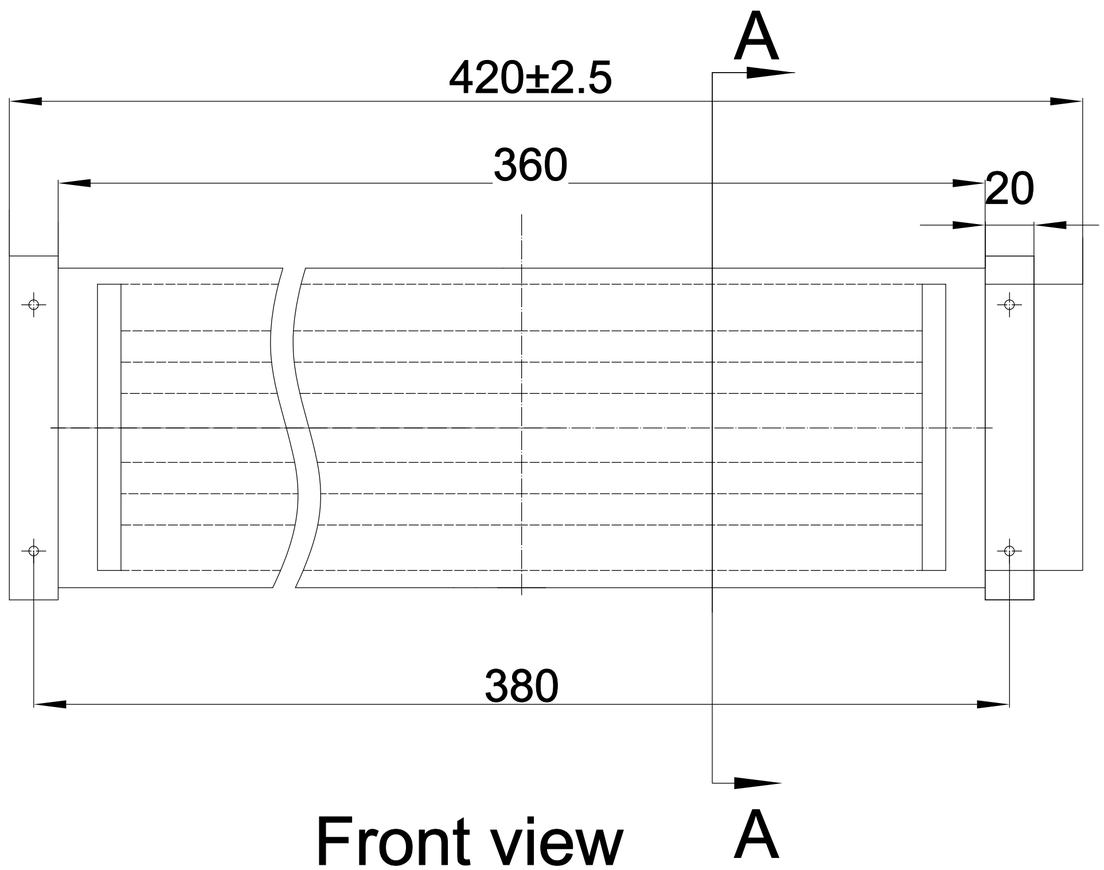

Front view

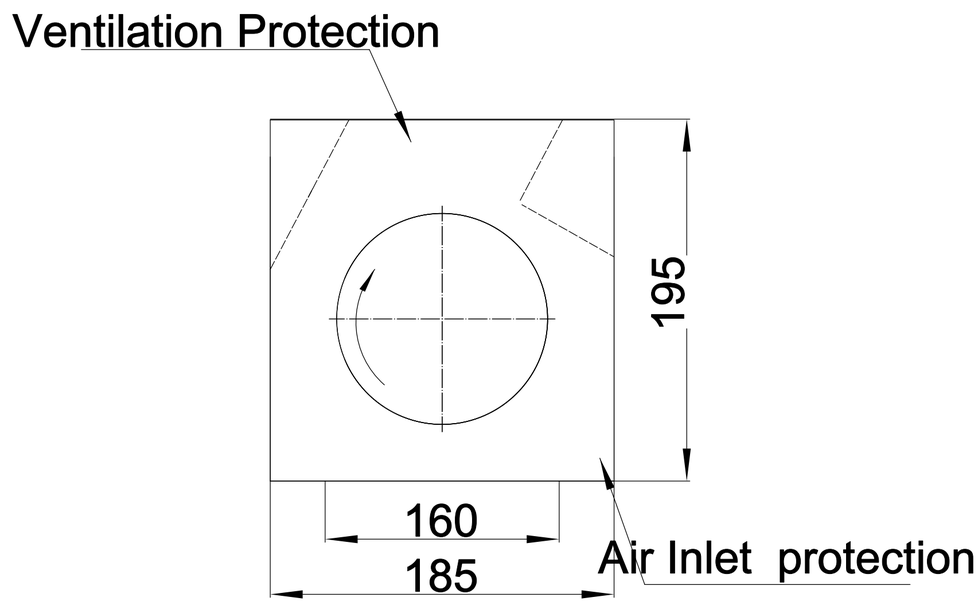

Side view

A-A

Technical Request

1. The appearance and surface of the product should be clean, without rust spots, mildew, scratches, No obvious burr and other surface defects.
2. Shell riveted firmly, no obvious gap, size in line with the drawing requirements.
3. Safety performance in accordance with GB/T13933-2008 regulations.
4. Unnoted tolerance is GB/T1804-v.

SPECIFICATION	
VOLTAGE (V)	AC 220
FREQUENCY (Hz)	50
CURRENT (A)	0.46
SPEED (r/min)	1400
AIR FLOW (m³/h)	1200
BEARINGS	Ball bearing
POWER (W)	80

Mark	Qty	Sign	Name	Date

Stage Mark		
S		
A1		
Design	ZHANG	20260424
Audit		
Technical		
Standard		
Approve		

Material		Ratio	1:2.5	Weight	

Ningbo Longwell Electric Technology Co., Limited

LWF-D420-150AS-01

第 1 页 共 1 页