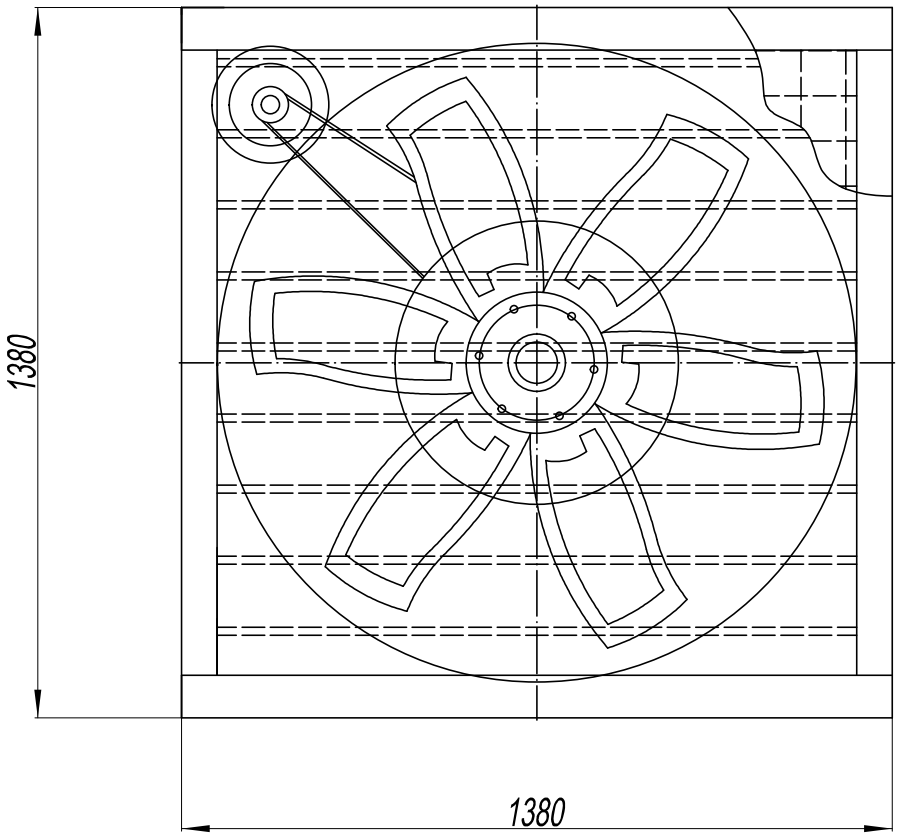

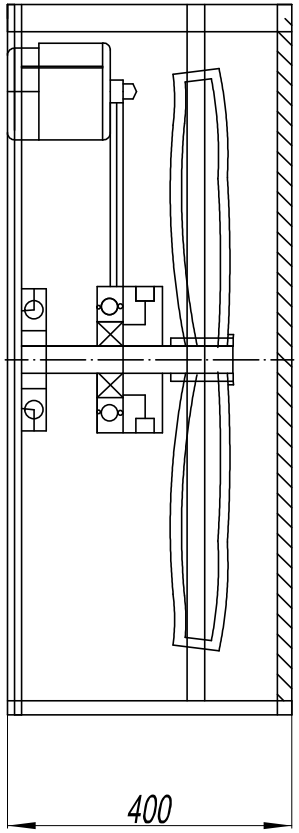

SPECIFICATION	
VOLTAGE (V)	1~220
FREQUENCY (Hz)	50
SPEED (r/min)	1400
AIR FLOW (m^3/h)	43500
DIAMETER OF BLADES (mm)	1270
BLADES SPEED (RPM)	440
TOTAL PRESSURE (Pa)	56
INPUT POWER (W)	1500
NOISE (dBA)	≤70

Mark	Qty	Sign	Name	Date

Stage Mark			
S			
Version	A1	Name	Date
Design		Zhong	20260414
Audit			
Technical			
Standard			
Approve			

Material		Ratio	1:1	Weight	
Ningbo Longwell Electric Technology Co., Limited					
LWPVE-1380S-05					
1	1				