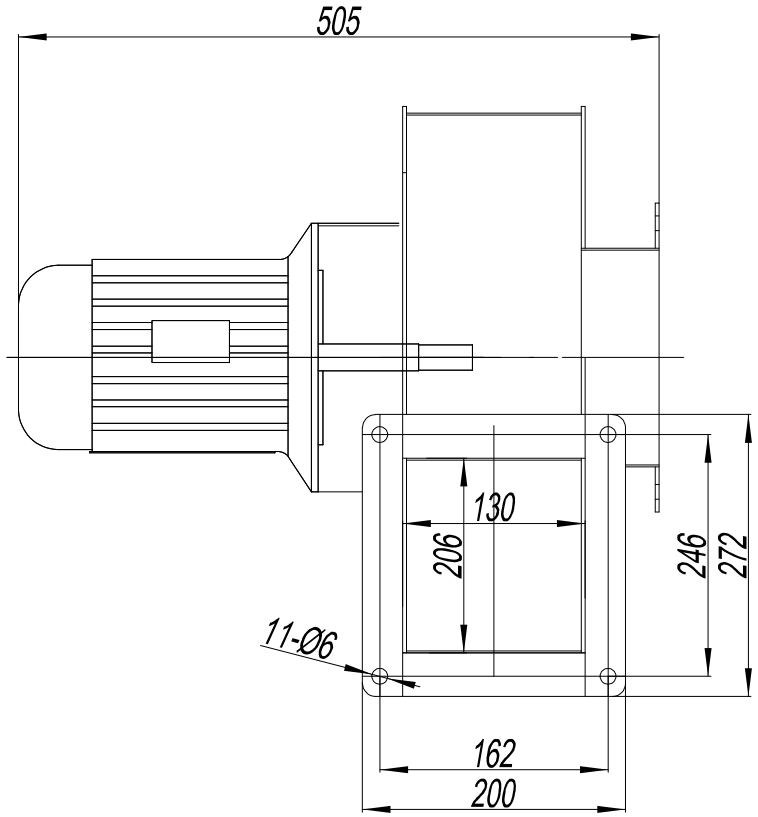

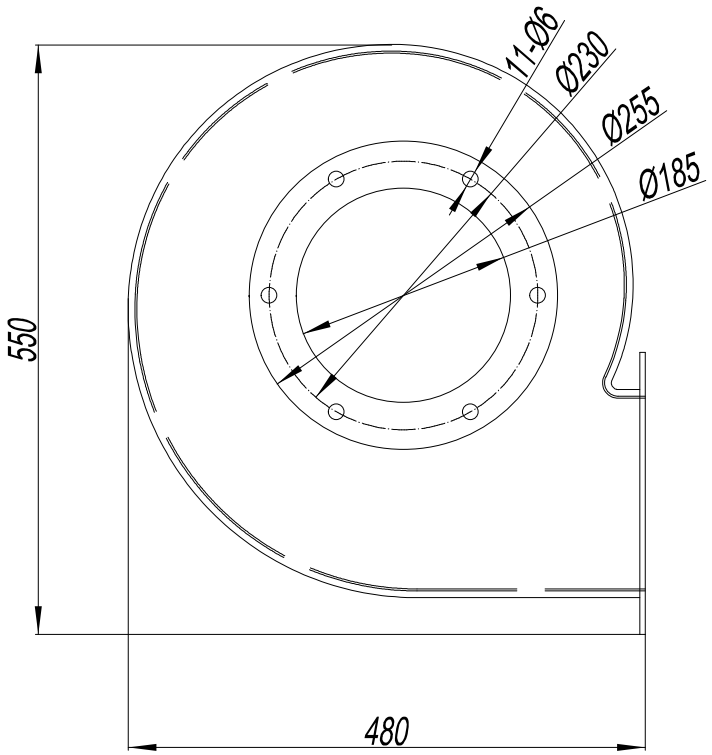

SPECIFICATION	
VOLTAGE (V)	3~415
FREQUENCY (Hz)	50
SPEED (r/min)	2800
AIR FLOW (m^3/h)	3100
PRESSURE (Pa)	1280
Power (W)	2200

Mark	Qty	Sign	Name	Date

Stage Mark			
S			
Version	A1	Name	Date
Design		Zhong	20260420
Audit			
Technical			
Standard			
Approve			

Material		Ratio	1:1	Weight	
Ningbo Longwell Electric Technology Co., Limited					
LW5-47-2.2KW-003					
1	1				