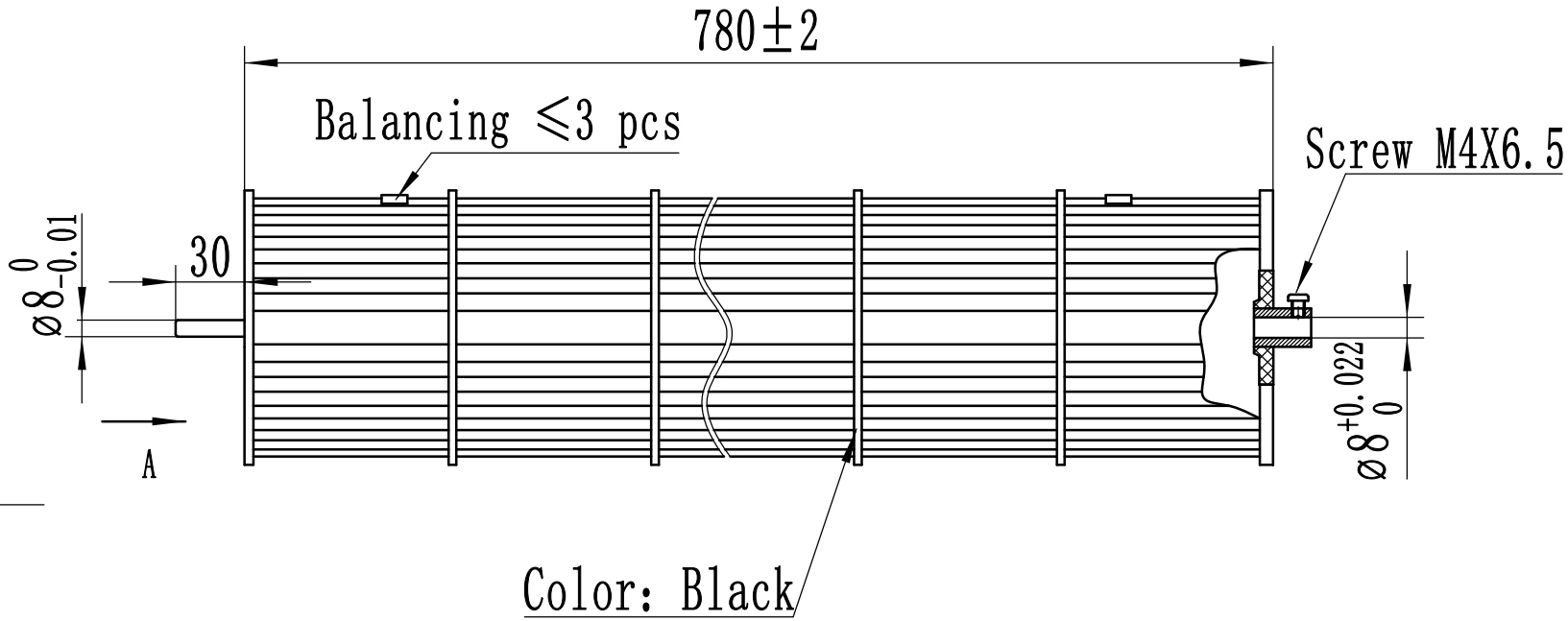

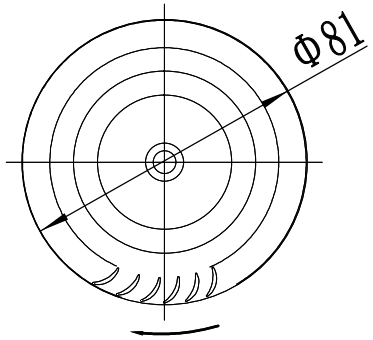

A-A Steel shaft end

Technical Request

1. The connection of blades shall be welded by noise wave, and there shall be no false welding and leakage welding defects;The welding should be strong.
2. The outer surface of wind leaves should be smooth, without burrs, cracks and other defects
3. The radial runout of the blade is less than 0.7mm, the axial runout is less than 0.6mm, and the shaft run out less than 0.2mm;
4. When the impeller bear the speed of 1600rpm, there is no abnormal sound;
5. The remaining unbalance measures ≤ 0.3g under the condition of 1200 rpm

					Stage Mark		
					S		
					A1		
					Design	GUO	20260608
					Audit		
					Technical		
					Standard		
Mark	Qty	Sign	Name	Date	Approve		

Material	AS+GF30%	Ratio	1:1	Weight	
Ningbo Longwell Electric Technology Co., Limited					
LWPI-Φ81x780-02					
Cross Flow Impeller					
第 1 页	共 1 页				